WEB ACCESS: http://www.yorkville.com

WORLD HEADQUARTERS
CANADA

Yorkville Sound
550 Granite Court
Pickering, Ontario
L1W-3Y8 CANADA

Voice: (905) 837-8481
Fax: (905) 837-8746

U.S.A.

Yorkville Sound Inc.
4625 Witmer Industrial Estate
Niagara Falls, New York
14305 USA

Voice: (716) 297-2920
Fax: (716) 297-3689

Quality and Innovation Since 1963

Printed in Canada

SERVICE MANUAL

Traynor YGL2

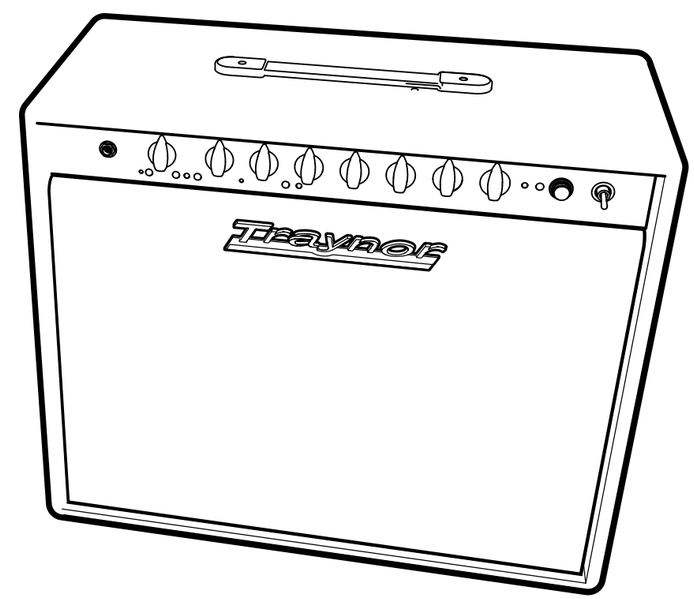

Manual-Service-YGL2-00-1v4 • August 24, 2021

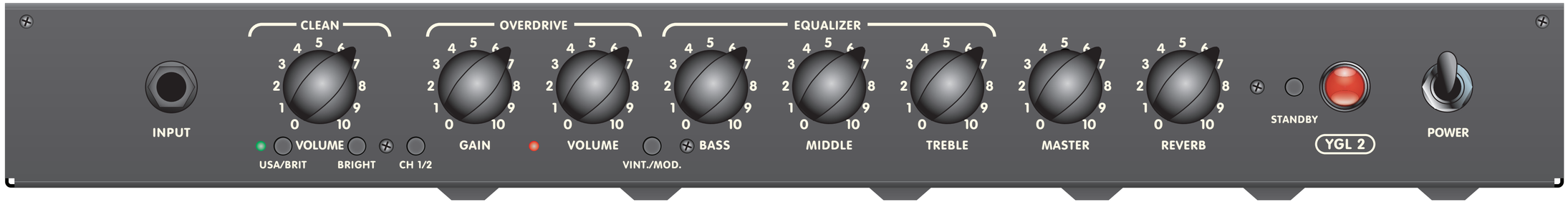
CLEAN
OVERDRIVE
EQUALIZER
INPUT
VOLUME
USA/BRIT
BRIGHT
CH 1/2
GAIN
VOLUME
VINT./MOD.
BASS
MIDDLE
TREBLE
MASTER
REVERB
STANDBY
YGL 2
POWER

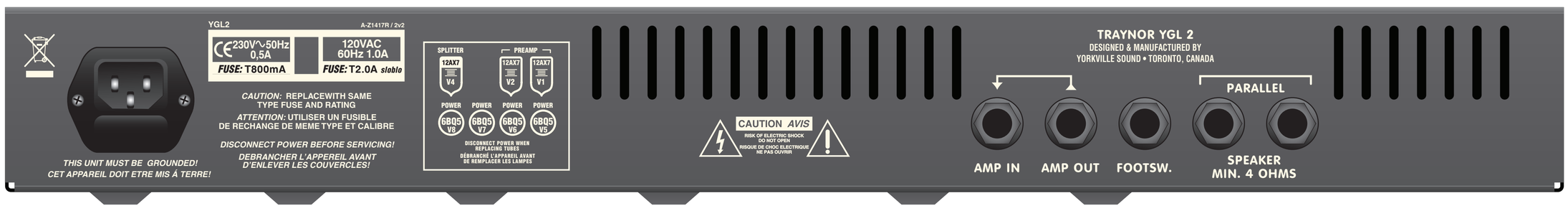
YGL2
A-Z1417R / 2v2
230V~50Hz 0,5A
FUSE: T800mA
120VAC 60Hz 1.0A
FUSE: T2.0A slo/blo
CAUTION: REPLACEWITH SAME TYPE FUSE AND RATING
ATTENTION: UTILISER UN FUSIBLE DE RECHANGE DE MEME TYPE ET CALIBRE
DISCONNECT POWER BEFORE SERVICING!
DEBRANCHER L'APPEREIL AVANT D'ENLEVER LES COUVERCLES!
THIS UNIT MUST BE GROUNDED!
CET APPAREIL DOIT ETRE MIS À TERRE!
SPLITTER
PREAMP
12AX7 V4
12AX7 V2
12AX7 V1
POWER
6BQ5 V8
6BQ5 V7
6BQ5 V6
6BQ5 V5
DISCONNECT POWER WHEN REPLACING TUBES
DÉBRANCHÉ L'APPAREIL AVANT DE REMPLACER LES LAMPES
CAUTION AVIS
RISK OF ELECTRIC SHOCK DO NOT OPEN
RISQUE DE CHOC ELECTRIQUE NE PAS OUVRIR
TRAYNOR YGL 2
DESIGNED & MANUFACTURED BY
YORKVILLE SOUND • TORONTO, CANADA
PARALLEL
AMP IN
AMP OUT
FOOTSW.
SPEAKER MIN. 4 OHMS

Specifications	
Type	YGL2 Class 'A' Tube Guitar Amplifier
Cabinet Impedance (ohms)	8
Power @ min. impedance (Watts)	30
Speaker Configuration	Single Vintage 30
Input Channels	2, footswitchable
inputs	1/4 inch phono
controls	Clean Gain, Overdrive Gain, Overdrive Volume, Bass, Mid, Treble, Master, Reverb
switches	USA/Brit, Bright, Channel Select, Vintage/Modern, Standby
Main Tone Controls	Bass, Mid, Treble (Vintage, Modern Modes)
Line Out (type / configuration)	1/4 inch TRS / Rear
Effects Loop / Location	Yes / Rear
Effects Footswitch / Function	Yes / Channel Select / Reverb Defeat
Internal Reverb / Effects	Accutronics Spring Reverb
LED Indicators	Power/Standby, Ch1 active, Ch2 active
Dimensions (DWH, inches)	10 x 22.5 x 20
Dimensions (DWH, cm)	25 x 57 x 51
Weight (lbs / kg)	45 / 20

Specifications subject to change without notice

Spécifications	
Type	Amplificateur à lampe Class 'A' pour guitare YGL2
Impédance d'enceinte (ohms)	8
Puissance @ impédance min. (Watts):	30
Configuration de Haut-Parleur	Un Vintage 30
Canaux d'entrées	2, Commutable a pied
entrée	1/4 pouce phono
commandes	Clean Gain, Overdrive Gain, Overdrive Volume, Bass, Mid,
sélecteurs	USA/Brit, Bright, Channel Select, Vintage/Modern
Commande de tonalitée Principales	Bass, Mid, Treble
Sortie Ligne (type / configuration)	1/4 pouce PBM / Arrière
Boucle d'Effet / emplacement	Oui / Arrière
Commutateur au Pied pour effets / Fonction	Oui / Commutation au Canaux / Désactivation du reverb
Réverbération/Effets Interne	Reverb a ressort Accutronics
DEL Indicatrices	Alimentation/Standby, Canaux 1 actif, Canaux 2 actif
Dimensions (PLH, pouce):	10 x 22.5 x 20
Dimensions (PLH, cm):	25 x 57 x 51
Poids (livres / kg):	45 / 20

Spécifications sujettes à changement sans préavis

TYPE: YS1095

Block Diagram for YGL 2

DESIGNED & MANUFACTURED BY YORKVILLE SOUND

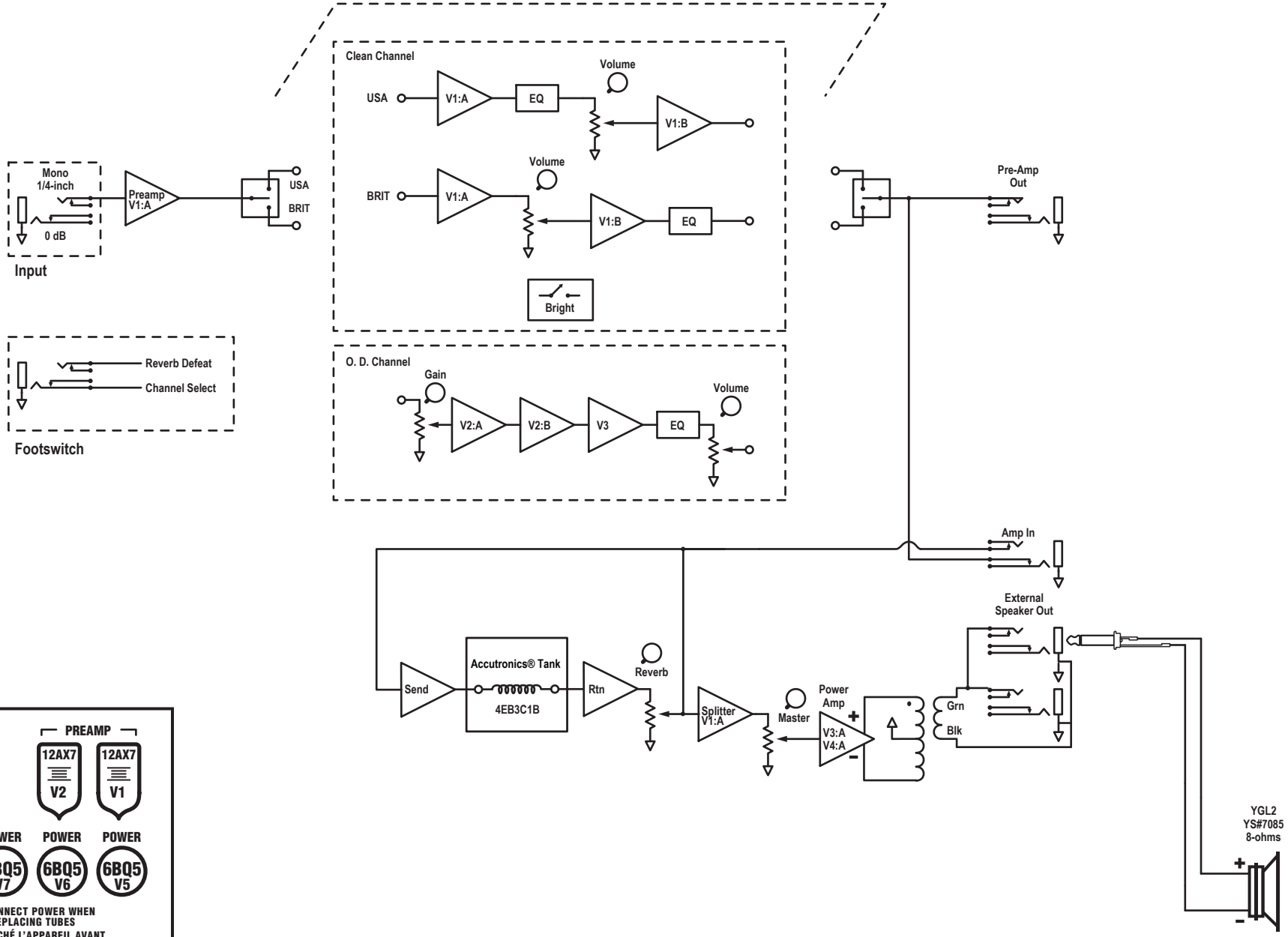

BLOCK-DIAG-YGL2-00-2v0.ai

M666 03 Parts Reference List 8/6/2021

REF	YS #	Description	REF	YS #	Description	REF	YS #	Description	REF	YS #	Description
AI-ASS	M666-59	YGL2/YGL2X12 30 WATT GUITAR AMP	D7	6438	1N4007 1000V 1A0 DIODE T&R	R51	4834	W250 47K 5% T&R RES	V5	3732	9 PIN PC MOUNT TUBE SOCKET BE
C1	5260	_22U 50V 20%CAP T&R RAD .2EL	D8	6438	1N4007 1000V 1A0 DIODE T&R	R52	4843	W250 470K 5% T&R RES	V6	3732	9 PIN PC MOUNT TUBE SOCKET BE
C2	5840	_22N 400V 10%CAP BLK RAD POLY FLM	D9	6438	1N4007 1000V 1A0 DIODE T&R	R53	4832	W250 22K 5% T&R RES	V7	3732	9 PIN PC MOUNT TUBE SOCKET BE
C3	5233	330N 63V 5%CAP T&R RAD .2FLM	D10	6438	1N4007 1000V 1A0 DIODE T&R	R54	4834	W250 47K 5% T&R RES	V8	3732	9 PIN PC MOUNT TUBE SOCKET BE
C4	5840	_22N 400V 10%CAP BLK RAD POLY FLM	D11	6438	1N4007 1000V 1A0 DIODE T&R	R55	4832	W250 22K 5% T&R RES	W4	2337	4 CIR XH-HEADER 0.098IN
C5	5208	__2N2 400V 5%CAP T&R RAD .2FLM	D12	6438	1N4007 1000V 1A0 DIODE T&R	R56	4841	W250 220K 5% T&R RES	W5	2337	4 CIR XH-HEADER 0.098IN
C6	5206	__1N 400V 5%CAP T&R RAD .2FLM	D13	6438	1N4007 1000V 1A0 DIODE T&R	R57	4639	W250 4K99 1% T&R RES	W7	4146	3 PIN POWER PIN HEADER MALE POLZED
C7	5206	__1N 400V 5%CAP T&R RAD .2FLM	J1	3921	1/4" JCK PCB MT VERT STER RT SWT	R58	4873	W250 680R 5% T&R RES	W9	4162	2 PIN POWER PIN HEADER MALE POLZED
C8	5865	100N 250V 10%CAP BLK RAD POLY FLM	J2	3450	1/4" JCK PCB MT ALL-GOLD SKT	R59	4821	W250 470R 5% T&R RES	W11	4151	4 PIN POWER PIN HEADER MALE POLZED
C10	5865	100N 250V 10%CAP BLK RAD POLY FLM	J3	3498	1/4" JCK PCB MT HORZ	R60	4800	W250 10K0 1% T&R RES	W18	2344	8 CIR XH-HEADER RA 0.098IN
C11	5206	__1N 400V 5%CAP T&R RAD .2FLM	J4	6541	RCA JACK SNGL PCB MT HOR K901	R61	4800	W250 10K0 1% T&R RES	W18_	2328	8 CIR XH-HEADER 0.098IN
C12	5224	_47N 100V 10%CAP T&R RAD .2FLM	J5	3498	1/4" JCK PCB MT HORZ	R62	2019	W125 100R0 1%FLAME PROOF T&R RES	W19	4145	9PIN 3X3 POWER PIN HEADER
C13	5222	_33N 100V 10%CAP T&R RAD .2FLM	J6	3498	1/4" JCK PCB MT HORZ	R63	2019	W125 100R0 1%FLAME PROOF T&R RES	W20	2344	8 CIR XH-HEADER RA 0.098IN
C14	5275	__3N3 100V 5%CAP T&R RAD .2FLM	J7	3450	1/4" JCK PCB MT ALL-GOLD SKT	R64	4958	2W00 220R 10% T&R RES	W20_	2328	8 CIR XH-HEADER 0.098IN
C15	5865	100N 250V 10%CAP BLK RAD POLY FLM	J8	6541	RCA JACK SNGL PCB MT HOR K901	R65	4958	2W00 220R 10% T&R RES	W22	4056	2 CIR XH-HEADER 0.098IN
C16	5255	__1U 63V 20%CAP T&R RAD UGT 5254	K1	3700	RELAY 2C 01AMP DC24 015MA PC-S	R66	4776	W250 113K 1% T&R RES	W22_	4056	2 CIR XH-HEADER 0.098IN
C17	5206	__1N 400V 5%CAP T&R RAD .2FLM	K2	3700	RELAY 2C 01AMP DC24 015MA PC-S	R67	4776	W250 113K 1% T&R RES	W24	4056	2 CIR XH-HEADER 0.098IN
C18	5211	330P 100V 5%CAP T&R RAD CER.2NPO	LD1	5906	RED 3MM LED 1V9 20MA.4SPCER T&R	R68	4844	W250 1M 5% T&R RES	W24_	4056	2 CIR XH-HEADER 0.098IN
C19	5199	100P 100V 2%CAP T&R RAD CER.2NPO	LD2	5908	GRN 3MM LED 1V9 20MA.4SPCER T&R	R69	4844	W250 1M 5% T&R RES	W26	2337	4 CIR XH-HEADER 0.098IN
C20	5206	__1N 400V 5%CAP T&R RAD .2FLM	LD3	6398	RED 5MM LED 1V5 20MA HIGH EFF	R70	4847	W250 2K2 5% T&R RES	W26_	2337	4 CIR XH-HEADER 0.098IN
C21	5260	_22U 50V 20%CAP T&R RAD .2EL	LD4	6399	YEL 5MM LED 1V5 20MA HIGH EFF	R71	4827	W250 4K7 5% T&R RES	X54	4599	22AWG SOLID SC WIR T&R JMP
C22	5260	_22U 50V 20%CAP T&R RAD .2EL	P1	4425	500K 15AAUDIO 9MM P32	R72	4827	W250 4K7 5% T&R RES	X55	4599	22AWG SOLID SC WIR T&R JMP
C23	5260	_22U 50V 20%CAP T&R RAD .2EL	P2	4425	500K 15AAUDIO 9MM P32	R73	4852	W250 100R 5% T&R RES	X60	4599	22AWG SOLID SC WIR T&R JMP
C24	5260	_22U 50V 20%CAP T&R RAD .2EL	P3	4425	500K 15AAUDIO 9MM P32	R74	4817	W250 47R 5% T&R RES	X61	4599	22AWG SOLID SC WIR T&R JMP
C25	5233	330N 63V 5%CAP T&R RAD .2FLM	P4	4425	500K 15AAUDIO 9MM P32	R75	4623	W500 1K 5% T&R RES			
C26	5233	330N 63V 5%CAP T&R RAD .2FLM	P5	4424	100K 1B LIN 9MM P32	R76	4800	W250 10K0 1% T&R RES			
C27	5233	330N 63V 5%CAP T&R RAD .2FLM	P6	4423	_20K 15AAUDIO 9MM P32	R77	4800	W250 10K0 1% T&R RES			
C28	5222	_33N 100V 10%CAP T&R RAD .2FLM	P7	4462	_50K BLIN 9MM P32	R78	4832	W250 22K 5% T&R RES			
C29	5222	_33N 100V 10%CAP T&R RAD .2FLM	P9	4430	100K 4B LIN 12MM STEREO P34	R79	4823	W250 1K 5% T&R RES			
C30	5840	_22N 400V 10%CAP BLK RAD POLY FLM	PCB1	M666BLAN	2_OZ 2SD 126.4 SQIN 01PER YGL2/212	R80	4800	W250 10K0 1% T&R RES			
C32	5212	100N 100V 5%CAP T&R RAD .2FLM	Q1	5102	BC560C TO92 PNP TRAN T&R TB	R81	4631	W500 2K 5% T&R RES			
C33	5282	_10U 16V 20%CAP T&R 5X7MM .2NP	Q2	5101	BC550C TO92 NPN TRAN T&R TB	R82	4827	W250 4K7 5% T&R RES			
C34	5209	__4N7 250V 5%CAP T&R RAD .2FLM	Q3	5101	BC550C TO92 NPN TRAN T&R TB	R83	4800	W250 10K0 1% T&R RES			
C35	5961	_33U 16V 20%CAP T&R RAD .2IN NP	Q4	5119	J111 TO92 NCH JFET T&R TC	R84	4823	W250 1K 5% T&R RES			
C36	5961	_33U 16V 20%CAP T&R RAD .2IN NP	Q5	5102	BC560C TO92 PNP TRAN T&R TB	R85	4800	W250 10K0 1% T&R RES			
C37	5204	_10N 100V 10%CAP T&R RAD .2FLM	R1	4776	W250 113K 1% T&R RES	R86	4800	W250 10K0 1% T&R RES			
C38	5204	_10N 100V 10%CAP T&R RAD .2FLM	R2	4791	W250 1K54 1% T&T RES	R87	4704	5W00 33R 5% BLK RES			
C39	5958	_22U 350V 20%CAP BLK 13X25 EL	R3	4803	W250 49K9 1% T&R RES	R88	4692	5W00 100R 5% BLK RES			
C40	5958	_22U 350V 20%CAP BLK 13X25 EL	R4	4844	W250 1M 5% T&R RES	R89	5031	1W00 10K0 5% T&R RES			
C41	5958	_22U 350V 20%CAP BLK 13X25 EL	R5	4776	W250 113K 1% T&R RES	R90	4632	W500 22K 5% T&R RES			
C42	5958	_22U 350V 20%CAP BLK 13X25 EL	R6	4791	W250 1K54 1% T&T RES	R91	4632	W500 22K 5% T&R RES			
C43	5958	_22U 350V 20%CAP BLK 13X25 EL	R7	4838	W250 100K 5% T&R RES	R92	4632	W500 22K 5% T&R RES			
C44	5958	_22U 350V 20%CAP BLK 13X25 EL	R8	4841	W250 220K 5% T&R RES	R93	4913	1W00 1K 5% T&R RES			
C45	5958	_22U 350V 20%CAP BLK 13X25 EL	R9	4841	W250 220K 5% T&R RES	R94	4641	W500 220K 5% T&R RES			
C46	5958	_22U 350V 20%CAP BLK 13X25 EL	R10	4841	W250 220K 5% T&R RES	R95	4735	1W00 100R 5% T&R RES			
C47	5630	330U 25V 20%CAP BLK 10X13MM EL	R11	4841	W250 220K 5% T&R RES	R96	4735	1W00 100R 5% T&R RES			
C48	5958	_22U 350V 20%CAP BLK 13X25 EL	R12	4776	W250 113K 1% T&R RES	R97	4735	1W00 100R 5% T&R RES			
C49	5958	_22U 350V 20%CAP BLK 13X25 EL	R13	4791	W250 1K54 1% T&T RES	R98	4735	1W00 100R 5% T&R RES			
C50	5958	_22U 350V 20%CAP BLK 13X25 EL	R14	4844	W250 1M 5% T&R RES	R99	4800	W250 10K0 1% T&R RES			
C51	5204	_10N 100V 10%CAP T&R RAD .2FLM	R20	4837	W250 82K 5% T&R RES	R100	4735	1W00 100R 5% T&R RES			
C52	5199	100P 100V 2%CAP T&R RAD CER.2NPO	R21	4836	W250 68K 5% T&R RES	R101	4847	W250 2K2 5% T&R RES			
C53	5635	1000U 35V 20%CAP BLK RADIAL ELECT	R22	4837	W250 82K 5% T&R RES	R102	4827	W250 4K7 5% T&R RES			
C54	5635	1000U 35V 20%CAP BLK RADIAL ELECT	R23	4832	W250 22K 5% T&R RES	R103	4800	W250 10K0 1% T&R RES			
C55	5212	100N 100V 5%CAP T&R RAD .2FLM	R24	4776	W250 113K 1% T&R RES	R104	4800	W250 10K0 1% T&R RES			
C56	5212	100N 100V 5%CAP T&R RAD .2FLM	R25	4791	W250 1K54 1% T&T RES	R105	4735	1W00 100R 5% T&R RES			
C57	5212	100N 100V 5%CAP T&R RAD .2FLM	R26	4803	W250 49K9 1% T&R RES	R106	4735	1W00 100R 5% T&R RES			
C58	5212	100N 100V 5%CAP T&R RAD .2FLM	R27	4843	W250 470K 5% T&R RES	R107	4735	1W00 100R 5% T&R RES			
C59	5212	100N 100V 5%CAP T&R RAD .2FLM	R28	4841	W250 220K 5% T&R RES	R108	4735	1W00 100R 5% T&R RES			
C60	5212	100N 100V 5%CAP T&R RAD .2FLM	R29	4837	W250 82K 5% T&R RES	R109	4735	1W00 100R 5% T&R RES			
C61	5212	100N 100V 5%CAP T&R RAD .2FLM	R30	4843	W250 470K 5% T&R RES	R110	4735	1W00 100R 5% T&R RES			
C62	5212	100N 100V 5%CAP T&R RAD .2FLM	R31	4837	W250 82K 5% T&R RES	R111	4958	2W00 220R 10% T&R RES			
C63	5618	470U 25V 20%CAP BLK 10X15MM EL	R32	4845	W250 2M2 5% T&R RES	R112	4958	2W00 220R 10% T&R RES			
C64	5618	470U 25V 20%CAP BLK 10X15MM EL	R33	4845	W250 2M2 5% T&R RES	R113	4800	W250 10K0 1% T&R RES			
C66	6451	__4N7 250V 20%CAP BLK 'Y' 10MM AC	R34	4845	W250 2M2 5% T&R RES	R114	4800	W250 10K0 1% T&R RES			
C67	6435	_22N 275V 20%CAP BLK 'X2' 15MM AC	R35	4845	W250 2M2 5% T&R RES	R115	4735	1W00 100R 5% T&R RES			
C68	5212	100N 100V 5%CAP T&R RAD .2FLM	R36	4834	W250 47K 5% T&R RES	R116	4841	W250 220K 5% T&R RES			
C69	5630	330U 25V 20%CAP BLK 10X13MM EL	R37	4834	W250 47K 5% T&R RES	S1	3440	4PDT MINI VERT ALT SWITCH			
C70	5961	_33U 16V 20%CAP T&R RAD .2IN NP	R38	4800	W250 10K0 1% T&R RES	S2	3522	DPDT MINI PC VERT SNP ALT			
C71	5208	__2N2 400V 5%CAP T&R RAD .2FLM	R39	4800	W250 10K0 1% T&R RES	S3	3522	DPDT MINI PC VERT SNP ALT			
C72	5820	470P 200V 5%CAP T&R BEAD NPO	R40	4891	W250 620R 5% T&R RES	S4	3522	DPDT MINI PC VERT SNP ALT			
C73	5204	_10N 100V 10%CAP T&R RAD .2FLM	R41	4891	W250 620R 5% T&R RES	S5	3522	DPDT MINI PC VERT SNP ALT			
C74	5234	470N 63V 10%CAP T&R RAD .2FLM	R42	4834	W250 47K 5% T&R RES	U1	6882	TL072CP IC FET DUAL OP AMP			
C75	5258	__4U7 63V 20%CAP T&R 5X7MM .2EL	R43	4800	W250 10K0 1% T&R RES	U2	6882	TL072CP IC FET DUAL OP AMP			
C76	5258	__4U7 63V 20%CAP T&R 5X7MM .2EL	R44	4834	W250 47K 5% T&R RES	U3	6884	NE5532N IC DUAL OP AMP			
D1	6825	1N4148 75V 0A45 DIODE T&R	R45	4800	W250 10K0 1% T&R RES	U4	6882	TL072CP IC FET DUAL OP AMP			
D2	6825	1N4148 75V 0A45 DIODE T&R	R46	4840	W250 33K 5% T&R RES	U5	6872	MC7815CT TO220 P 15V0 REG V1			
D3	6825	1N4148 75V 0A45 DIODE T&R	R47	4840	W250 33K 5% T&R RES	U6	6871	MC7915CT TO220 N 15V0 REG V2			
D4	6438	1N4007 1000V 1A0 DIODE T&R	R48	4862	W250 5K6 5% T&R RES	V1	3732	9 PIN PC MOUNT TUBE SOCKET BE			
D5	6438	1N4007 1000V 1A0 DIODE T&R	R49	4834	W250 47K 5% T&R RES	V2	3732	9 PIN PC MOUNT TUBE SOCKET BE			
D6	6438	1N4007 1000V 1A0 DIODE T&R	R50	4639	W250 4K99 1% T&R RES	V4	3732	9 PIN PC MOUNT TUBE SOCKET BE			

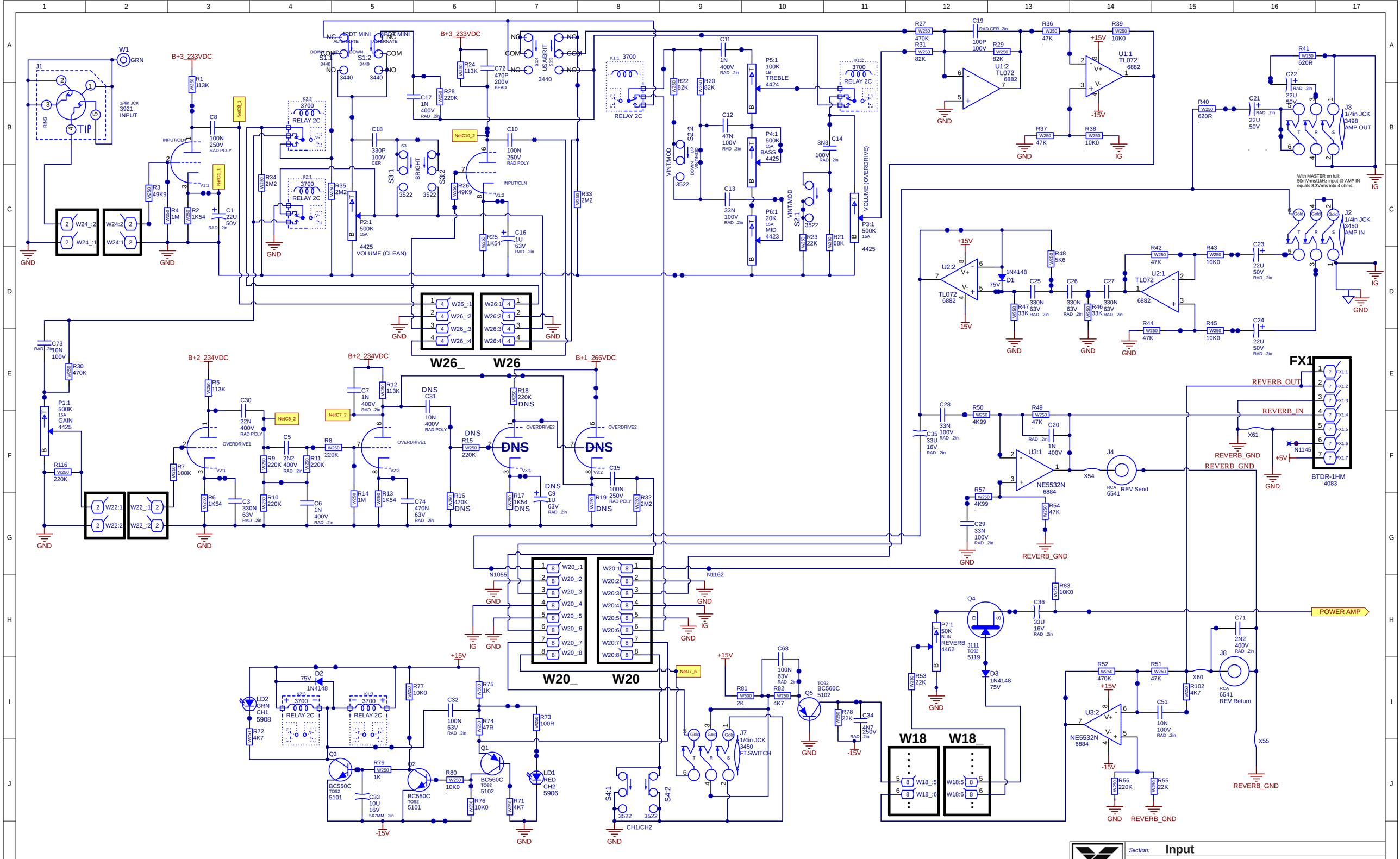

Section: Input			
Product(s): YGL2			
PCB#: M666	Rev#: V03	EML Rev#: 01	Sheet 1 Of 4
Modified: 2021-05-12	File: Input.SCHDOC		Tmp Rev: V031

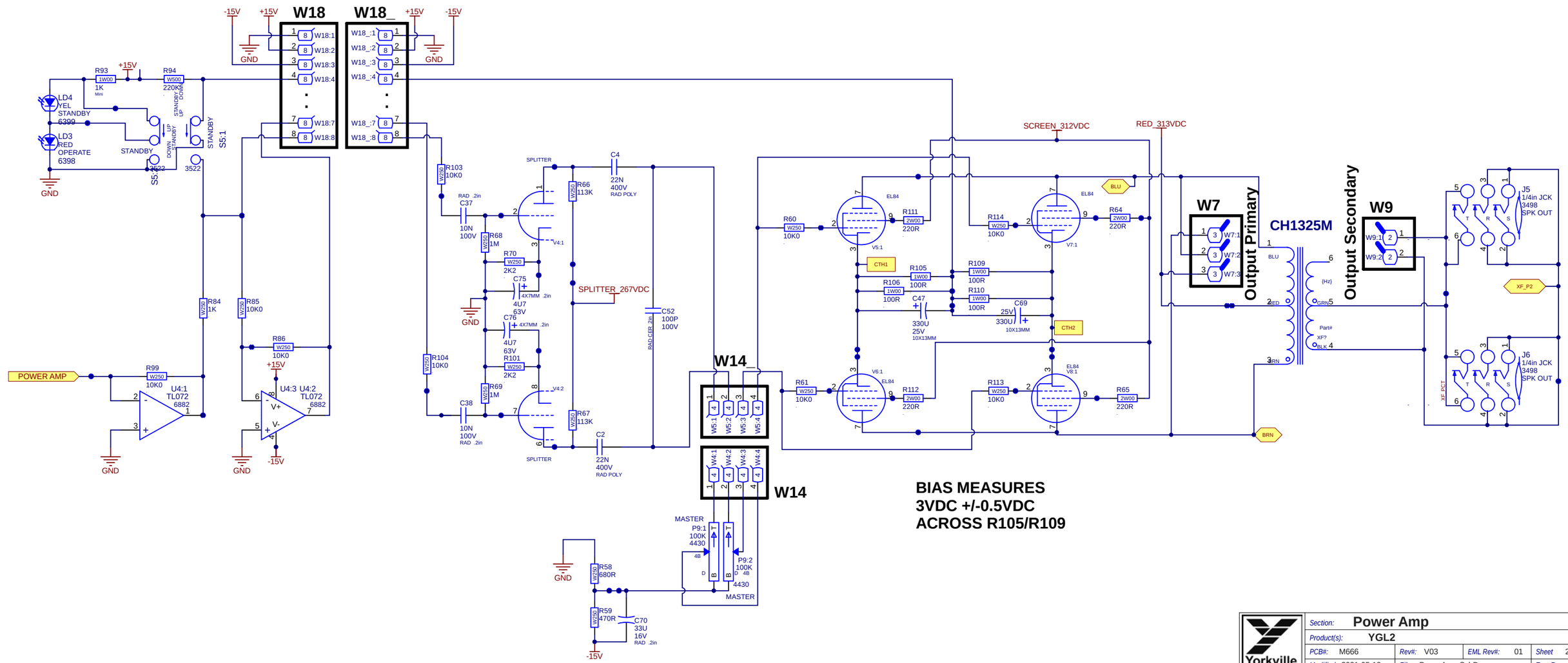

BIAS MEASURES
3VDC +/-0.5VDC
ACROSS R105/R109

Yorkville	Section:	Power Amp			
	Product(s):	YGL2			
	PCB#: M666	Rev#: V03	EML Rev#: 01	Sheet 2 Of 4	
	Modified: 2021-05-12	File: PowerAmp.SchDoc		Tmp Rev: V031	

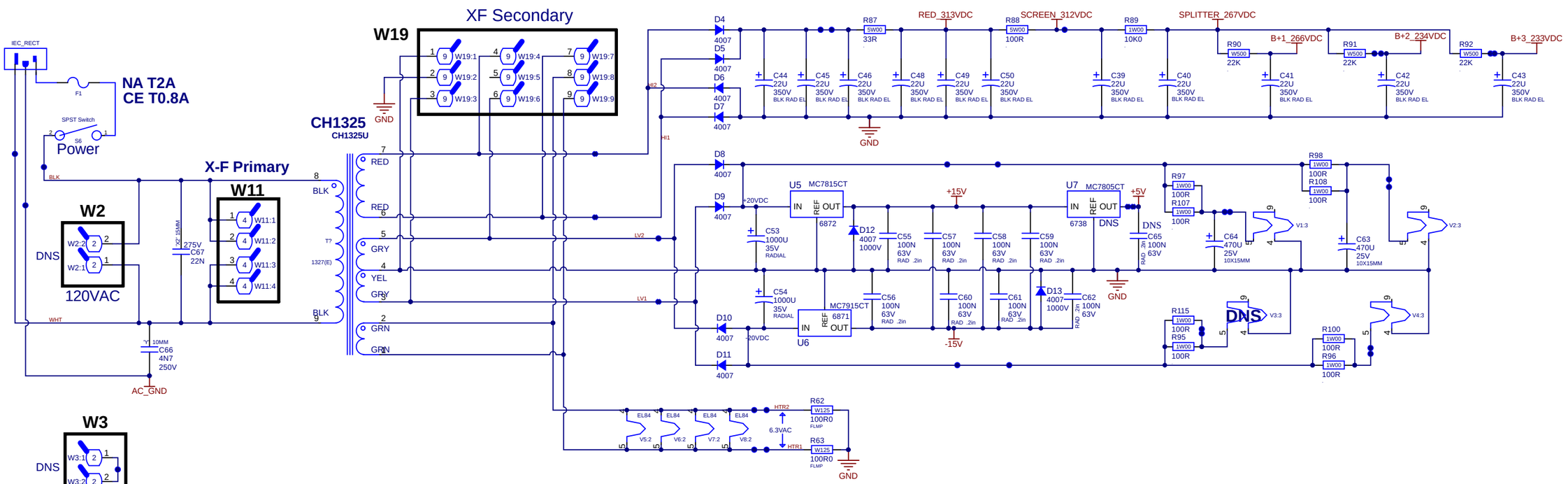

Section:	Power Supply
Product(s):	YGL2
PCB#: M666	Rev#: V03 · EML Rev#: 01 · Sheet 3 Of 4
Modified: 2021-05-12	File: PowerSupply.SchDoc · Tmp Rev: V031

Yorkville

DESIGN HISTORY AND INFORMATION

CHANGE HISTORY

#	DATE	VER#	PC#	DESCRIPTION OF CHANGE
1	27-MAY-2011	V01	.	Release
2	08-MAY-2012	.	8391	PC8391: added note for Japanese version. ML
3	05-MAR-2013	.	.	Added voltages on schematic and pots list. ML
4	23-OCT-2014	V02	.	Converted to Altium, DS, implement rework. GG
5	20-SEP-2018	V03	8734	Added diodes to across U5 and U6
6	.	.	.	.
7	.	.	.	.
8	.	.	.	.
9	.	.	.	.
10	.	.	.	.
11	.	.	.	.
12	.	.	.	.
13	.	.	.	.

POTENTIOMETERS AND KNOBS

POTENTIOMETERS AND KNOBS				
REF	FUNCTION	POT#	STYLE	KNOB#
P1	GAIN	4425	P32	8430
P2	CLEAN VOLUME	4425	P32	8430
P3	VOLUME	4425	P32	8430
P4	BASS	4425	P32	8430
P5	TREBLE	4424	P32	8430
P6	MID	4423	P32	8430
P7	REVERB	4462	P32	8430
P9	MASTER	4430	P34	8430
.	.	.	.	.
.	.	.	.	.
.	.	.	.	.
.	.	.	.	.
.	.	.	.	.

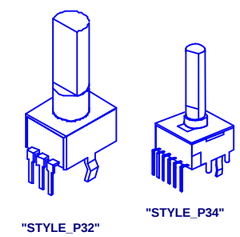

LEADS AND PINS REFERENCE

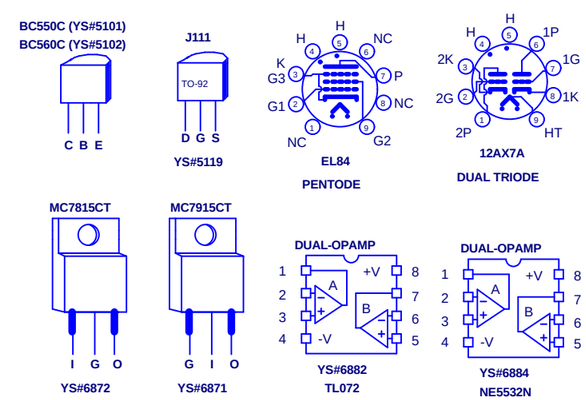

THIS SHEET CONTAINS A CHANGE HISTORY LOG, A LIST OF THE POTS & KNOBS AND A LEADS & PINS REFERENCE SECTION.

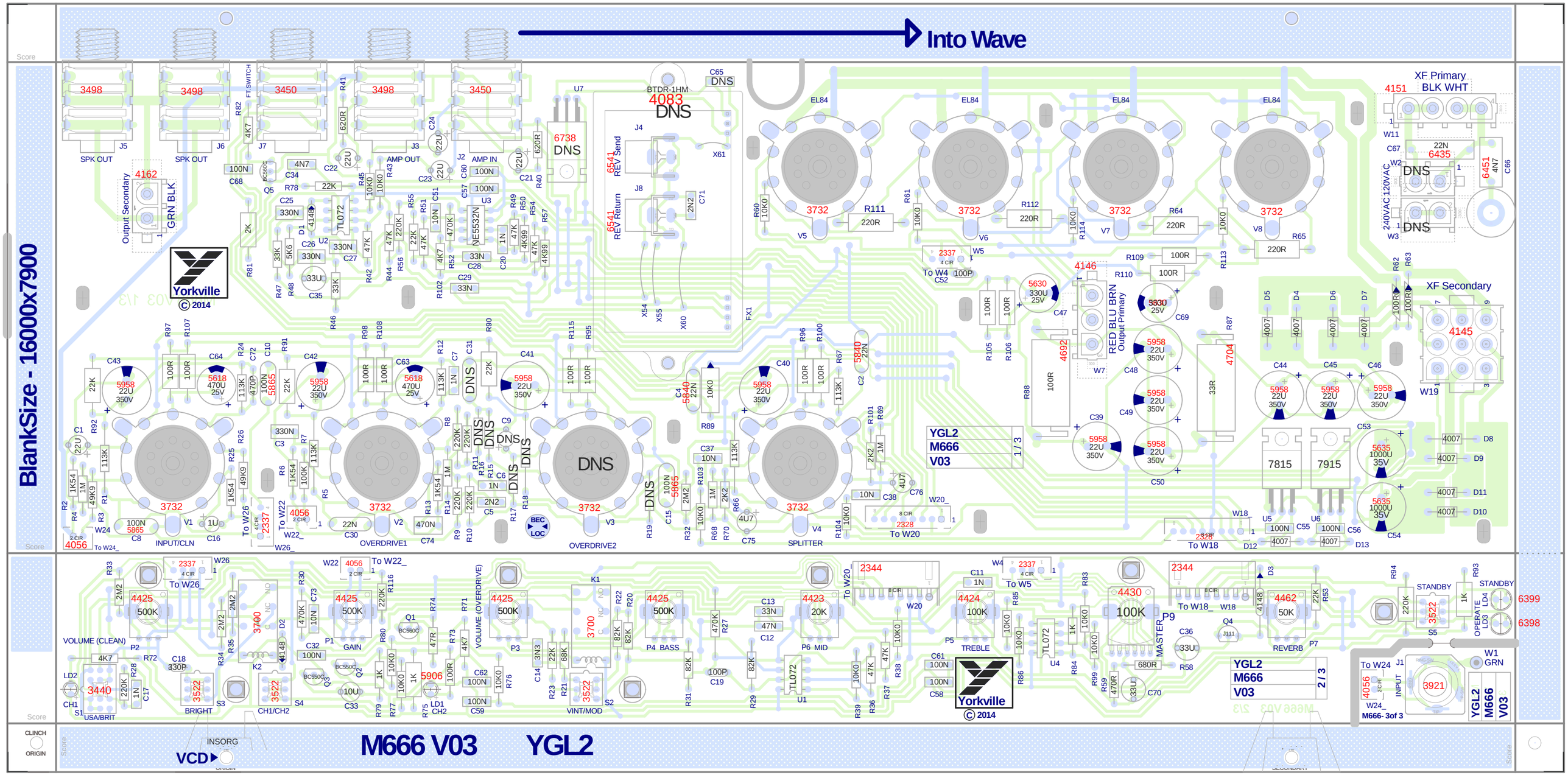
Into Wave
BlankSize - 16000x7900
SPK OUT
Output Secondary
GRN BLK
AMP OUT
AMP IN
FT.SWITCH
BTDR-1HM
REV Send
REV Return
XF Primary
BLK WHT
240VAC 120VAC
XF Secondary
RED BLU BRN
Output Primary
INPUT/CLN
OVERDRIVE1
OVERDRIVE2
SPLITTER
Yorkville
© 2014
YGL2
M666
V03
1 / 3
2 / 3
VOLUME (CLEAN)
GAIN
VOLUME (OVERDRIVE)
BASS
MID
TREBLE
MASTER
REVERB
BRIGHT
CH1/CH2
USA/BRIT
VINT/MOD
INPUT
STANDBY
OPERATE
M666- 3of 3
M666 V03
YGL2
VCD
INSORG
CLINCH
ORIGIN

PCB ASSEMBLY DOCUMENTATION

SPECIAL PRODUCTION NOTES

1. FOR YGL2J (JAPANESE MODEL) REPLACE U5 WITH 6747 AND U6 WITH 6746.

2. PCBSA: Break out board before testing.

3. Add RTV to all electrolitic caps.

PCB HARDWARE

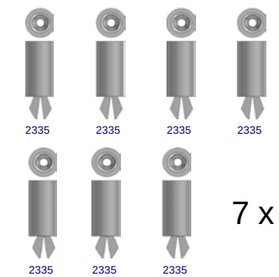

7 x #2335

THIS SHEET CONTAINS SPECIAL PRODUCTION NOTES AND A LIST OF PCB HARDWARE PARTS REQUIRED FOR THE BUILD.

Yorkville	Section: Assembly Documentation			
	Product(s): YGL2			
	PCB#: M666	Rev#: V03	EML Rev#: 01	Sheet 2 Of 3
	Modified: 2021-05-12	File: Assembly.SchDoc		Tmp Rev: V031

DESIGN HISTORY AND INFORMATION

CHANGE HISTORY

#	DATE	VER#	PC#	DESCRIPTION OF CHANGE
1	27-MAY-2011	V01	.	Release
2	08-MAY-2012	.	8391	PC8391: added note for Japanese version. ML
3	05-MAR-2013	.	.	Added voltages on schematic and pots list. ML
4	23-OCT-2014	V02	.	Converted to Altium, DS, implement rework. GG
5	20-SEP-2018	V03	8734	Added diodes to across U5 and U6
6	.	.	.	.
7	.	.	.	.
8	.	.	.	.
9	.	.	.	.
10	.	.	.	.
11	.	.	.	.
12	.	.	.	.
13	.	.	.	.

POTENTIOMETERS AND KNOBS

POTENTIOMETERS AND KNOBS				
REF	FUNCTION	POT#	STYLE	KNOB#
P1	GAIN	4425	P32	8430
P2	CLEAN VOLUME	4425	P32	8430
P3	VOLUME	4425	P32	8430
P4	BASS	4425	P32	8430
P5	TREBLE	4424	P32	8430
P6	MID	4423	P32	8430
P7	REVERB	4462	P32	8430
P9	MASTER	4430	P34	8430
.	.	.	.	.
.	.	.	.	.
.	.	.	.	.
.	.	.	.	.
.	.	.	.	.

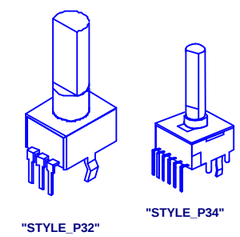

LEADS AND PINS REFERENCE

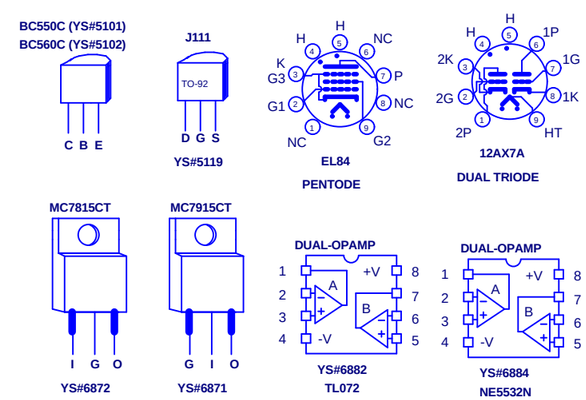

THIS SHEET CONTAINS A CHANGE HISTORY LOG, A LIST OF THE POTS & KNOBS AND A LEADS & PINS REFERENCE SECTION.

Traynor

YGL2

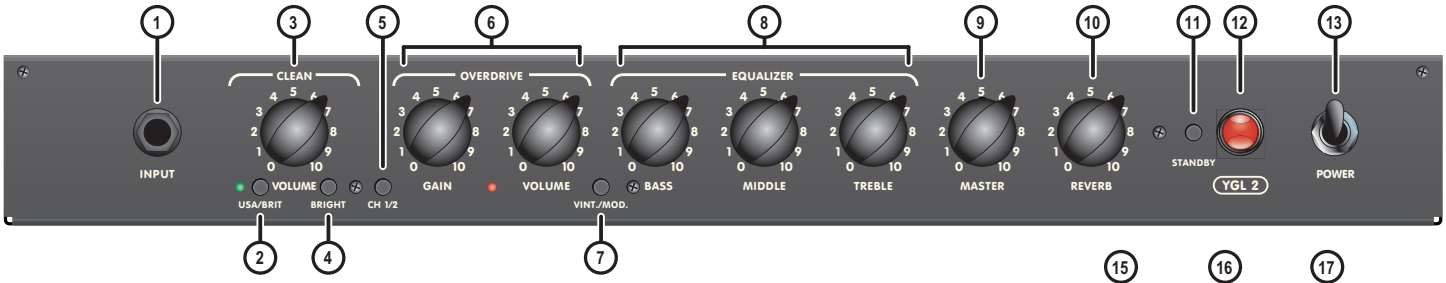

1. Input Jack – 1/4-inch phone jack

2. USA/Brit Switch – Selects the order of gain structure in the signal chain of the Clean Channel.

USA: Places the Tone controls before the Clean Volume.

Brit: Places the Clean Volume before a second gain stage that drives the Tone controls.

3. Clean Volume – Works in conjunction with the Master and is used to adjust the amount of input gain.

4. Bright Switch – Add sparkle to your clean sound. The effect is more noticeable at lower Volume settings and will diminish as the Volume is increased.

5. Channel Select – Select between the Clean and the Overdrive Channels. A footswitch overrides this switch and channel selection will only work using the footswitch.

6. Overdrive Gain and Volume – The Gain sets the amount of tube saturation and the Volume controls the level sent to Master.

7. Vintage/Modern Switch – Selects between two ranges of frequencies for the tone controls.

8. Tone Controls – The Treble, Bass, and Middle controls help you shape your sound.

9. Master – Allows you to set the actual loudness of the amplifier.

10. Reverb – This adjusts the overall reverb level. The YGL2 is equipped with an Accutronics® spring reverb for authentic vintage reverb.

11. Standby Switch – Controls the voltage being supplied to the tubes keeping the tubes warmed up when the amp is not in use. The jewel indicator changes to yellow when in Standby mode.

12. Indicator – The jewel indicator glows red when the amp is powered-up and operational.

13. Power – Located on the front panel, this switch turns the power on and off.

14. Power Receptacle – plug in the supplied IEC power cable (rear).

15. Amp In/Out Send & Return Jacks – Connect a 1/4-inch cable to the Send jack, then connect this cable to the Input of your effects unit. To send the signal back, connect the output of the effects unit to the Return jack.

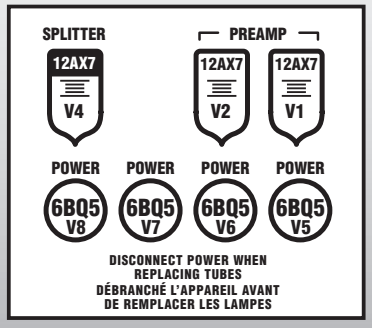

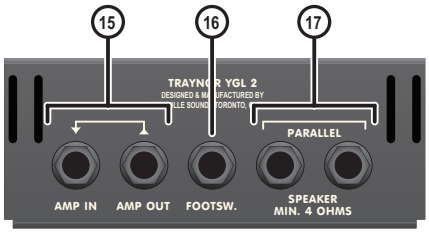

The Amp Out (send) can be used as a line out (preamp-out). The Amp In (return) is used as the return for your effects loop.

16. Footswitch Jack – Using a footswitch to the 1/4-inch TRS Footswitch jack will defeat the internal reverb and allow you to switch between the 'Clean and Overdrive' channels.

17. External Speaker Jack – These jacks allow connection for an 8-ohm external cabinet. If you disconnect the internal Celestion® speaker, you can connect up to two 8-ohm external cabinets.

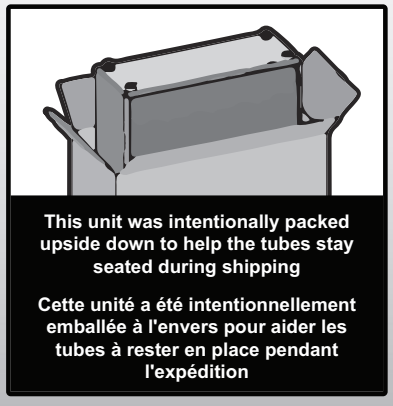

To get the full Owner's Manual please visit our website at
http://www.yorkville.com/manuals/ or, if you need a printed version call **905-837-8777**

REAL Gear.
REAL People.

Canada
Voice: (905) 837-8481
Fax: (905) 837-8746

U.S.A.
Voice: (716) 297-2920
Fax: (716) 297-3689

www.yorkville.com

Yorkville Sound
550 Granite Court
Pickering, Ontario
L1W-3Y8 CANADA

Yorkville Sound Inc.
4625 Witmer Industrial Estate
Niagara Falls, New York
14305 USA

Printed In CANADA
QuickStart-YGL2-00-1v0 • YS#QST-YGL2 • August 24, 2021

Traynor

YGL2

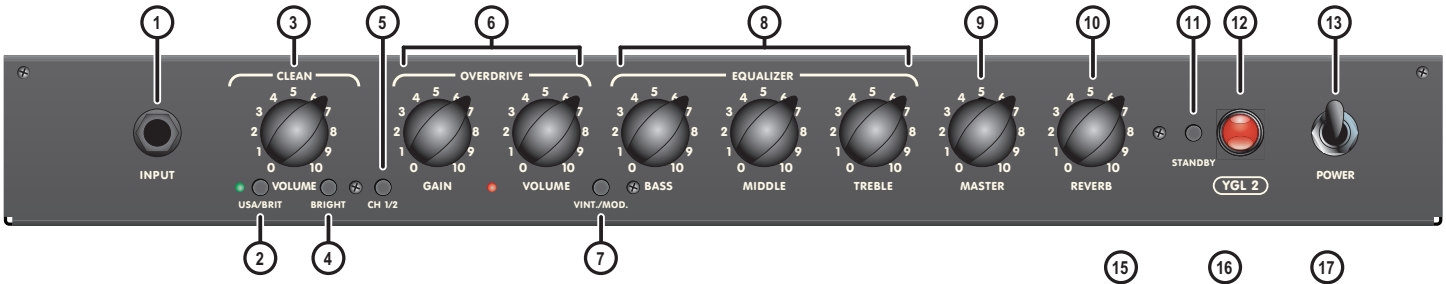

1. Prise d'Entrée - Jack de 1/4 pouce

2. Sélecteur USA/Brit - Sélectionne l'ordre de la structure de gain dans la chaîne du signal du canal Clean.

USA: Place les commandes de tonalité avant le réglage de volume Clean.

Brit: Place le réglage de volume Clean avant un deuxième étage de gain qui alimente les commandes de tonalité.

3. Volume Clean - Fonctionne en conjonction avec la commande Master et est utilisé pour ajuster la quantité de gain d'entrée.

4. Sélecteur Bright - Ajoute de l'éclat à votre son clair. L'effet est plus perceptible lorsque le volume est faible et diminue à mesure que le volume augmente.

5. Sélecteur de Canal - Permet de sélectionner les canaux Clean ou Overdrive. Une pédale de commande a priorité sur ce sélecteur et la sélection du canal ne fonctionnera qu'en utilisant la pédale de commande.

6. Gain et Volume du Canal Overdrive - Le gain détermine la quantité de saturation des tubes et le volume règle le niveau acheminé vers la commande Master.

7. Sélecteur Vintage/Modern - Permet de choisir entre deux gammes de fréquences pour les commandes de tonalité

8. Commandes de Tonalité - Les commandes Treble, Bass et Middle vous aident à façonner votre son.

9. Master - Permet de régler le niveau sonore de l'amplificateur.

10. Reverb - Permet de régler le niveau de réverbération global. Le YGL2 est équipé d'une réverbération à ressort Accutronics® pour une réverbération vintage authentique.

11. Sélecteur Standby - Contrôle la tension appliquée aux tubes, ce qui permet de les maintenir chauds lorsque l'ampli n'est pas utilisé. Le voyant passe au jaune en mode Standby.

12. Indicateur - Le voyant s'allume en rouge lorsque l'ampli est sous tension et opérationnel.

13. Alimentation - Situé sur le panneau avant, cet interrupteur permet d'allumer et d'éteindre l'appareil.

14. Prise d'Alimentation - Permet le branchement le câble d'alimentation IEC fourni (à l'arrière).

15. Prises Amp In/Out Send & Return - Connectez un câble avec prise ¼ pouce à la prise Send, puis connectez l'autre extrémité de ce câble à l'entrée de votre unité d'effets. Pour renvoyer le signal, connectez la sortie de l'unité d'effets à la prise Return.

La sortie Amp Out (envoi) peut être utilisée comme sortie de niveau ligne

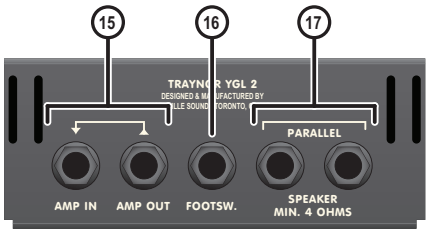

(sortie de préampli). L'entrée Amp In (return) est utilisée comme retour pour votre boucle d'effets.

16. Prise Pour Pédale de Commande - L'utilisation d'une pédale de commande sur la prise pour pédale de commande (jack TRS 1/4 pouce) permet d'annuler la réverbération interne et de sélectionner les canaux «Clean» ou «Overdrive».

17. Prises Pour Haut-Parleur Externe - Ces prises permettent la connexion d'un haut-parleur externe de 8 ohms. Si vous déconnectez le haut-parleur interne Celestion®, vous pouvez connecter jusqu'à deux enceintes externes de 8 ohms.

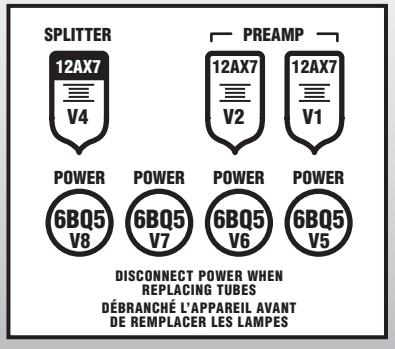

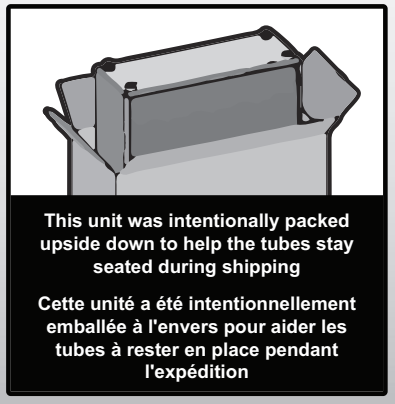

Pour obtenir le manuel de utilisateur visitez notre site Web à http://www.yorkville.com/manuals/
ou, si vous avez besoin d'une version impr imée appelez-nous au **905-837-8777**

REAL Gear.
REAL People.

Canada
Voice: (905) 837-8481
Fax: (905) 837-8746

U.S.A.
Voice: (716) 297-2920
Fax: (716) 297-3689

www.yorkville.com

Yorkville Sound
550 Granite Court
Pickering, Ontario
L1W-3Y8 CANADA

Yorkville Sound Inc.
4625 Witmer Industrial Estate
Niagara Falls, New York
14305 USA

YGL2 Quick Guide

Real Gear.
Real People.

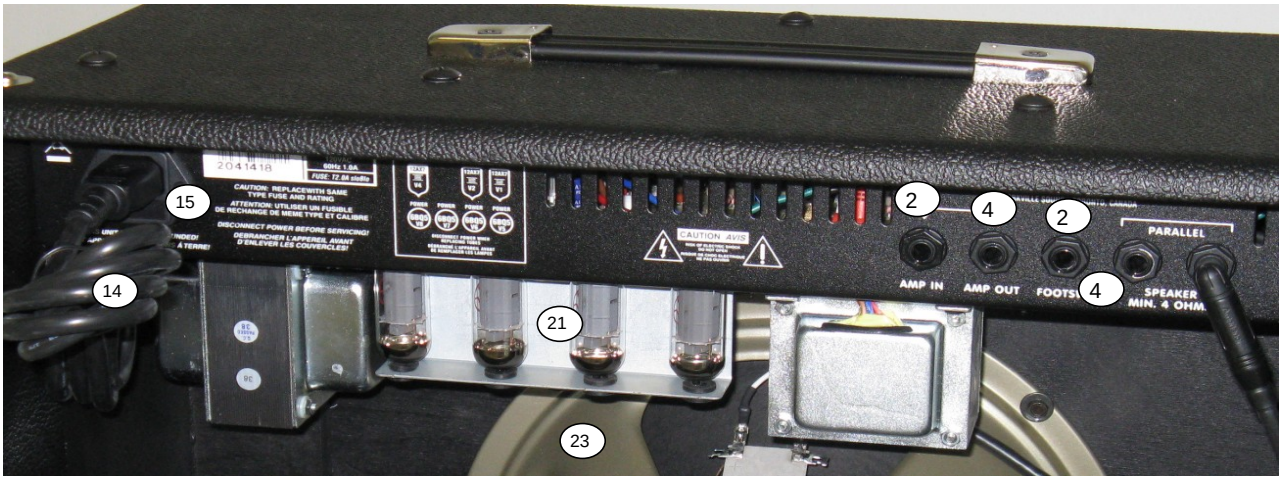

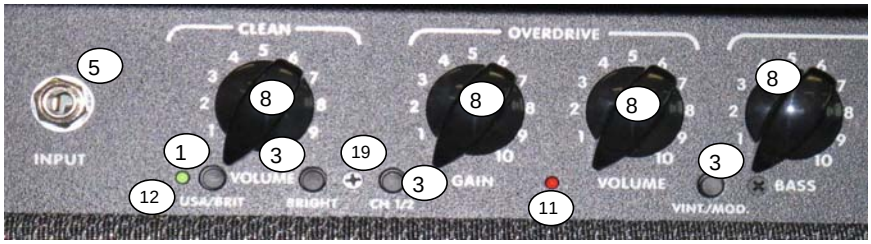

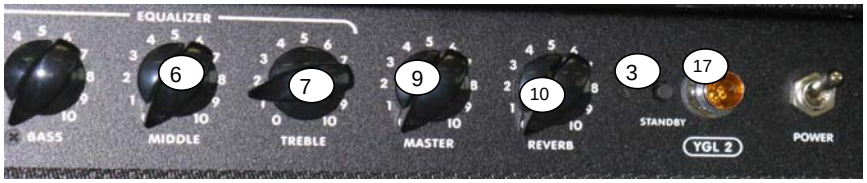

***NOT SHOWN**

	PART#	DESCRIPTION
1	3440	4PDT MINI VERT ALT SWITCH
		USA/Brit Switch
2	3450	1/4" JCK PCB MT ALL-GOLD SKT
		Foot Switch & Amp In Jacks
3	3522	DPDT MINI PC VERT SNP ALT
		Bright&Ch1/Ch2&Vint/Mod&Standby
4	3498	1/4" JCK PCB MT HORZ
		Amp Out & Spk Out Jacks
5	3921	1/4" JCK PCB MT VERT STER RT SWT
		Input Jack
6	4423	20K 15AAUDIO 9MM
		Mid Control
7	4424	100K 1B LIN 9MM
		Treble Control
8	4425	500K 15A AUDIO 9MM
		Vol & Gain & OD Vol & Bass Control
9	4430	100K 4B LIN 12MM STEREO
		Master Control
10	4462	50K BLIN 9MM
		Reverb Control
11	6398	RED 5MM LED 1V5 20MA HIGH EFF
		Channel 2 L.E.D.
12	6399	YEL 5MM LED 1V5 20MA HIGH EFF
		Channel 1 L.E.D.
13	2403	T2,0AL 5X20MM
14	3428	8' 3/18 SJT AC LINE CORD REMOVABLE
15	3438	PWR INLET & FUSE DRAWER
16	3554	DPST TOGGLE SW QUICK .250" 4 TERM
		Power Switch
17	6397	JEWELED PILOT LAMP AMBER REG
18	8430	KNOB CHICKEN-BEAK
19	8633	KNOB ROUND PUSHBUTTON 1/4" BLK
20*	12AX7EH	12AX7 DUAL TRIODE PREAMP TUBE
		Input/Clean, Overdrive 1&2 & Splitter
21	6BQ5	EL84 PENTODE OUTPUT TUBE JJ
		Output
22*	3537	ACC# 4EB3C1B LONG REVERB
23	7081	12" 8R 60WPGM SPKR CELEST VINT3
24	8268	TRAYNOR LOGO PLASTIC NICKEL PLATE
25	8456	10.0" STRAP HANDLE, NICKEL END CAP
26	8475	#10 STAINLESS STEEL CUP WASHER
27*	8522	RUBBER BUMPER/ WASHER -SMALL
28	8504	CORNER, 2 LEGS NOTCED LIP NICKEL
29	8912	10-32 X 1 FLAT PHIL MS JS500 BLK
30*	TFS-2B	TRAYNOR DUAL FOOTSWCH 10' CORD

Yorkville Sound
550 Granite Court
Pickering, Ontario
Canada L1W 3Y8

Auto Attend: (905) 837-8550 Fax: (905) 837-8746

www.yorkville.com